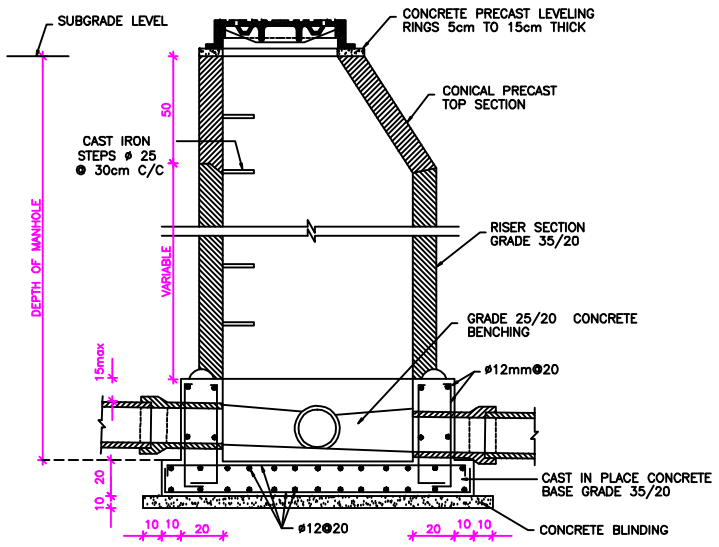

MANHOLE TYPE B
SECTION

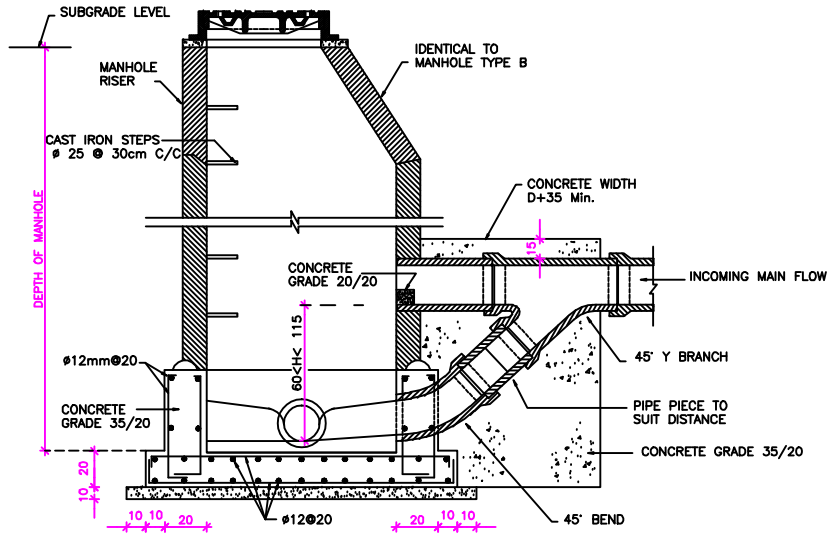

MANHOLE TYPE C
SECTION

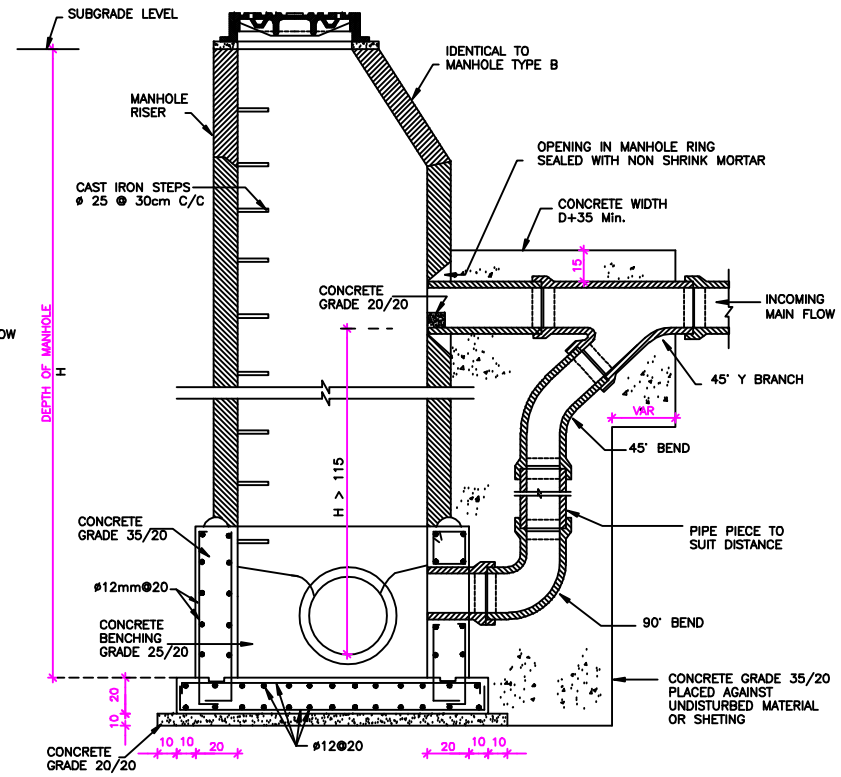

MANHOLE TYPE D
SECTION

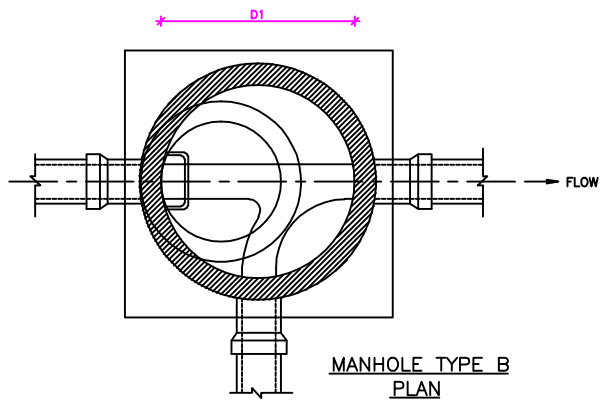

MANHOLE TYPE B
PLAN

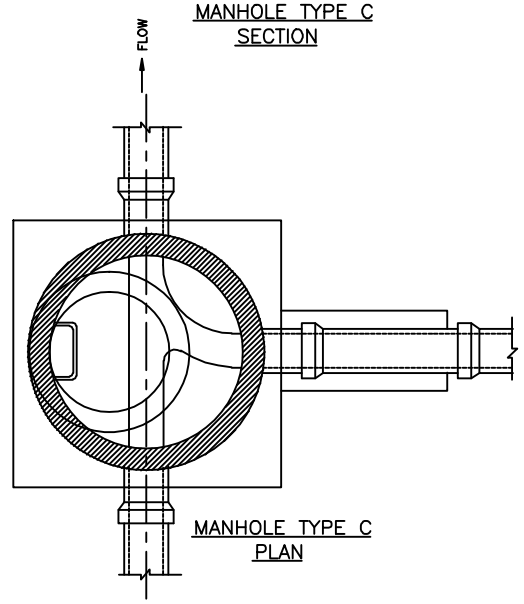

MANHOLE TYPE C
PLAN

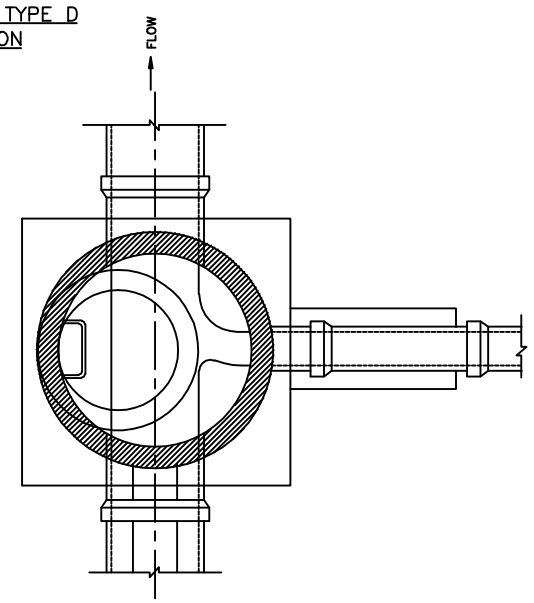

MANHOLE TYPE D
PLAN

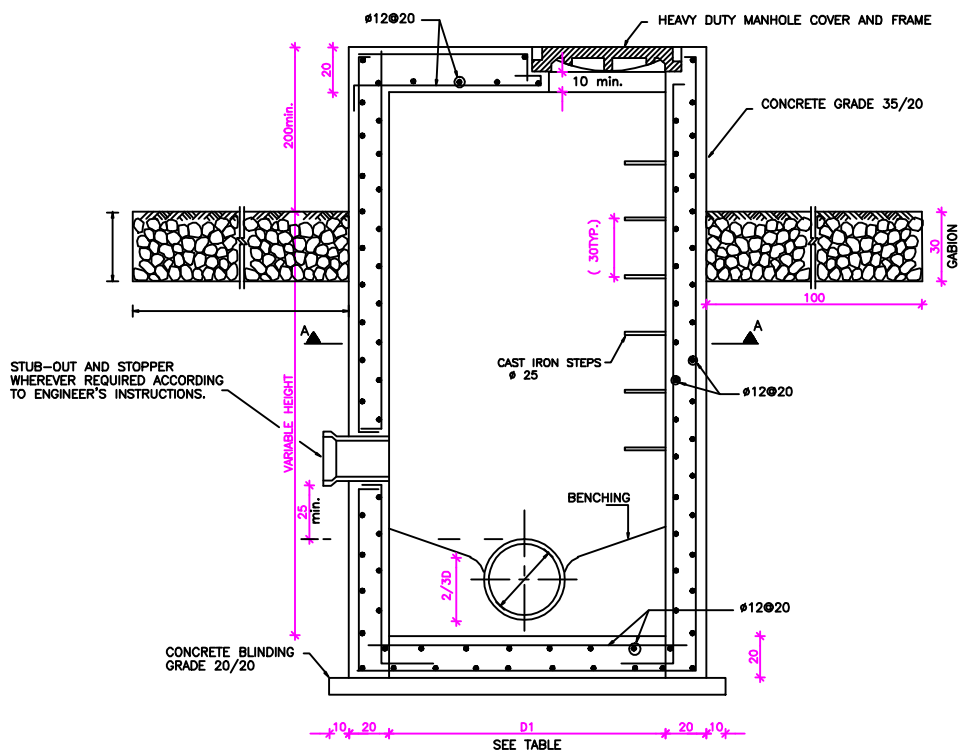

SECTION
TYPICAL CAST INSITU MANHOLE ALONG WADI

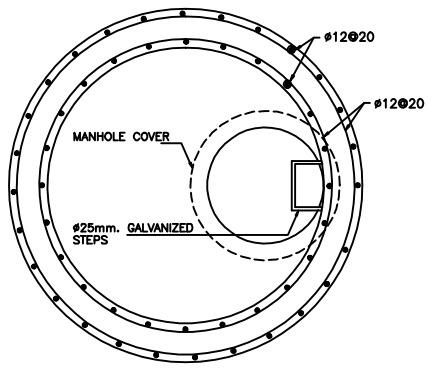

SECTION A–A
TYPICAL CAST INSITU MANHOLE ALONG WADI

NOTES:–

1. ALL DIMENSIONS ARE IN CM. UNLESS OTHERWISE INDICATED.
2. CONCRETE FOR BENCHING IN MANHOLES SHALL BE GRADE 25/20 .
3. ALL MANHOLES IN FOOTPATHS SHALL BE FITTED WITH MEDIUM DUTY CAST IRON COVERS AND FRAMES.
4. ALL MANHOLES IN ROADS SHALL BE FITTED WITH HEAVY DUTY CAST IRON COVERS AND FRAMES.
5. A DROP MANHOLE SHALL BE USED AT ALL DROPS GREATER THAN 60 Cm.
6. IN DROP MANHOLES THE CROWN OF THE DROP PIPE AT THE BASE OF MANHOLE SHALL BE AT THE SAME LEVEL AS THE CROWN OF OUTLET PIPE.
7. MANHOLE RISER SHALL BE PRECAST R.C. PIPES OF 900mm DIA. MANUFACTURED IN VARIABLE HEIGHTS OF 100cm, 50cm AND 20cm.
8. FITTINGS SUCH AS WYES, BENDS, TEES, CAPPED ENDS, PLUGS, ETC.., WILL BE PART OF THE SEWER SYSTEM AND SHALL NOT BE MEASURED FOR SEPARATE PAYMENT.
9. ALL MANHOLES SHOWN ARE PRECAST REINFORCED CONCRETE EXCEPT MANHOLES ALONG WADI WHICH SHALL BE CAST INSITU WITH REINFORCEMENT AS SHOWN IN DETAIL.
10. PRECAST CONCRETE RINGS WILL HAVE NOMINAL REINFORCEMENT OF #6–8mm/10cm BOTH SIDES.
11. CONCRETE ENCASEMENT TO BE PROVIDED GENERALLY FOR PIPES WITH LESS THAN 70cm COVER. ALSO ENCASEMENT SHALL BE PROVIDED FOR PIPE WITH MORE THAN 600cm COVER OR AS INDICATED ON DRAWINGS.
12. FOR PIPES HAVING DIAMETERS GREATER THAN 700mm SEE MANHOLE DETAILS ON OTHER STANDARD DETAIL DRAWING.
13. MANHOLES WITH A DROP IN LEVEL BETWEEN A HOUSE CONNECTION OUTLET AT THE MANHOLE AND THE LEVEL OF MANHOLE OUTLET SHALL NOT BE CONSIDERED AS A DROP MANHOLE.
    DROP MANHOLES ARE MAHOLES WITH A DROP IN MAIN LINES ONLY.
14. DEPTH OF MANHOLE TO BE MEASURED FROM INVERT LEVEL OF MANHOLE TO SUBGRADE LEVEL OF THE PAVEMENT.
15. DROP PIPES SHALL NOT BE REDUCED IN SIZE BUT SHALL HAVE THE SAME SIZE AS THE CONNECTING SEWER PIPE.
16. MIN MANHOLE DIAMETER SHOULD BE INCREASED 100mm FOR EACH CONNECTION ABOVE THE TWO INLETS CONNECTED TO THE MANHOLE.

PIPE DIAMETER (D) (mm.)	INTERNAL MANHOLE DIAMETER (D1) (mm.)
200	900 PER–CAST
300	900 PER–CAST
400	1200 PER–CAST
500	1200 PER–CAST
600	1500 PER–CAST
700	1500 PER–CAST
> 1000	D+600 CAST IN SITU CIRCULAR OR AS SPECIFIED

MANHOLE SIZES BASED ON PIPE DIAMETER

REVISIONS

THE HASHEMITE KINGDOM OF JORDAN
MINISTRY OF WATER & IRRIGATION
YARMOUK WATER CO.(L.L.C)

STANDARD DETAILS
Sewer lines

CONTRACTOR :

CONSULTANT :
YARMOUK WATER CO.(L.L.C)

DESIGNED BY		DATE	
DRAWN BY		SCALE	N.T.S
CHECKED BY		DWG NO:	001
APPROVED BY			