TYPICAL DEEP MANHOLE (CAST IN-SITU)

PLAN

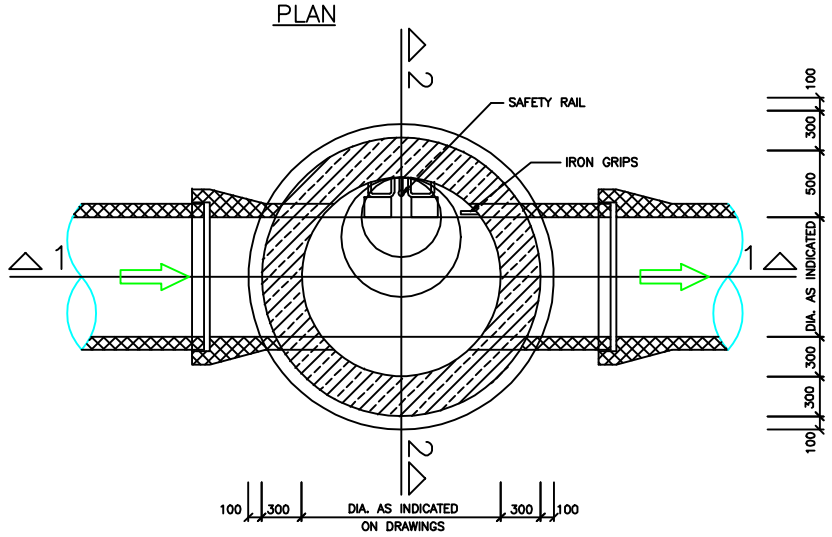

SECTION 1-1

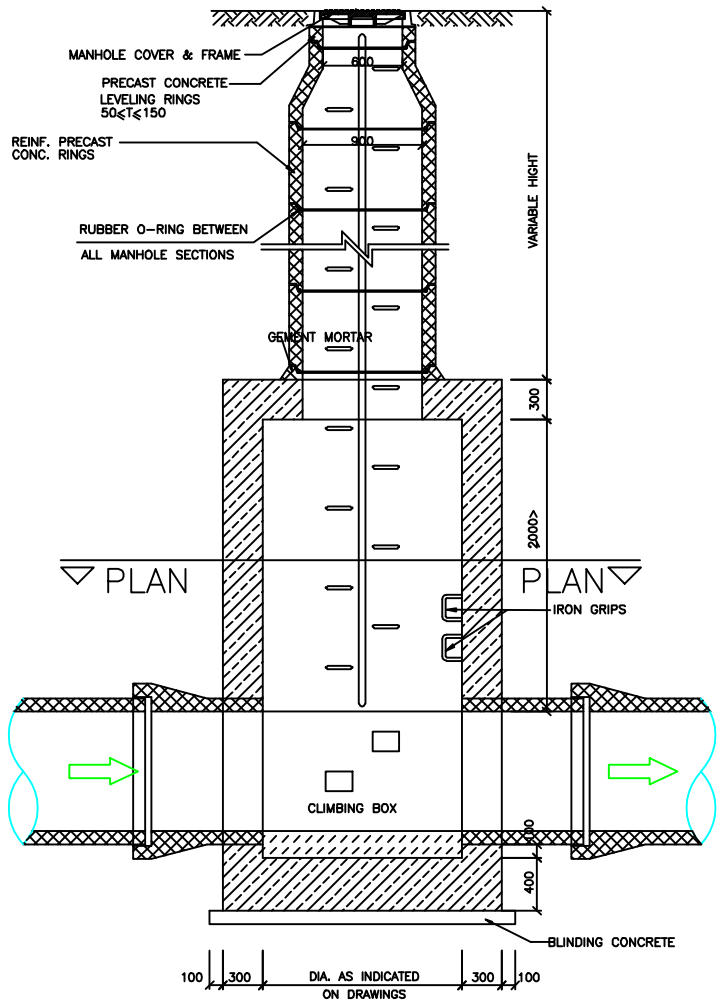

SECTION 2-2

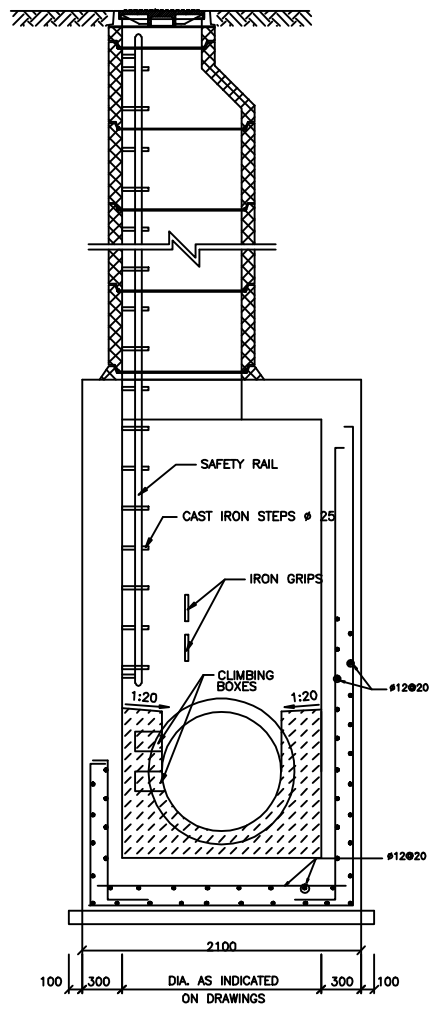

TYPICAL MANHOLE CAST IRON STEP FOR DEEP MANHOLES

NTS

PLAN

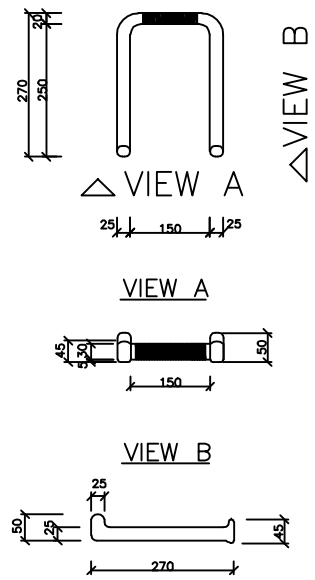

DETAIL OF CAST IRON STEPS INSTALLATION

NTS

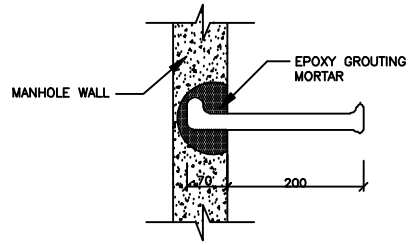

HEAVY DUTY CAST(Material non recyclable)
VENTILATED & LOCKABLE
COVER AND FRAME

PLAN

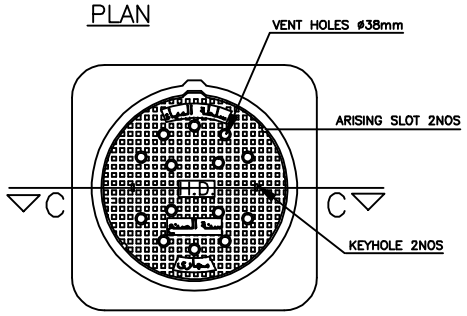

SECTION C-C

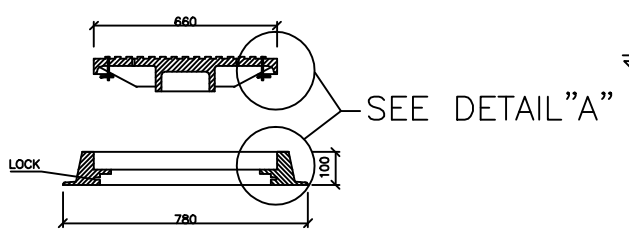

DETAIL "A"

NTS

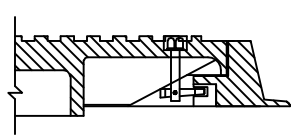

HEAVY DUTY CAST
Material non recyclable
COVER AND FRAME

NTS

PLAN

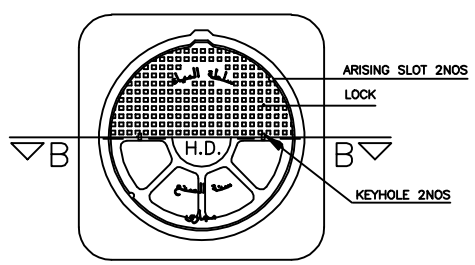

SECTION B-B

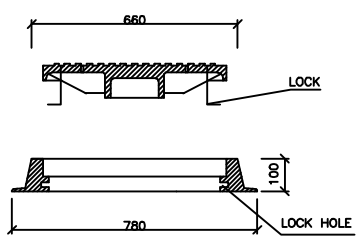

MEDIUM DUTY CAST
(Material non recyclable)COVER AND FRAME

NTS

PLAN

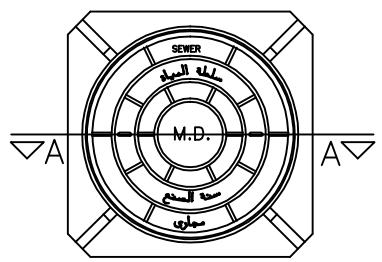

SECTION A-A

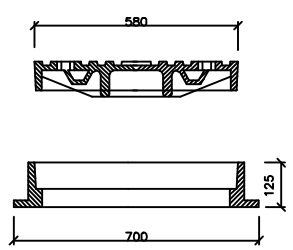

TYPICAL MANHOLE CAST IRON STEP

NTS

PLAN

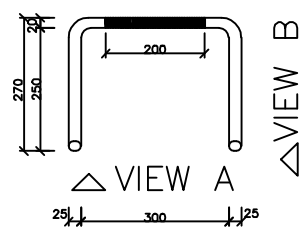

VIEW A

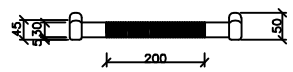

VIEW B

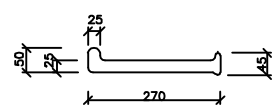

NOTES

1- ALL DIMENSIONS ARE IN MILLIMETERS UNLESS OTHERWISE INDICATED.

2- BENCHING TO BE RAISED UP TO THE PIPES CROWN LEVEL

3- IRON GRIPS AND CLIMBING BOXES TO BE PROVIDED FOR PIPES ND 700 AND GREATER

4- SAFETY RAIL SHALL BE USED FOR MANHOLES DEEPER THAN 5.00 METERS MANHOLES DEEPER THAN 5.00 METERS

5- FOR DEEP TRENCHS SHOULD USE SHEET PILES

REVISIONS

THE HASHEMITE KINGDOM OF JORDAN
MINISTRY OF WATER & IRRIGATION
YARMOUK WATER CO.(L.L.C)

STANDARD DETAILS
Sewer lines

CONTRACTOR :

CONSULTANT :
YARMOUK WATER CO.(L.L.C)

DESIGNED BY		DATE	
DRAWN BY		SCALE	N.T.S
CHECKED BY		DWG NO:	003
APPROVED BY			